YANMAR

PARTS CATALOG

0CD50-M02150EN

Last update Oct., 2019

PREFACE

This parts catalog is the 1st edition of 3TNM72-ATE for SWAN GROUP.

Published : April, 2016

Contents

0CD50-M02150

Fig. No.	Fig. Name
3TNM72-ATE	
1.	CYLINDER BLOCK
2.	GEAR HOUSING
3.	MOUNTING FLANGE & OIL SUMP
4.	CYLINDER HEAD & BONNET
5.	EXHAUST MANIFOLD
6.	CAMSHAFT & DRIVING GEAR
7.	CRANKSHAFT & PISTON
8.	LUB. OIL SYSTEM
9.	COOLING WATER SYSTEM
10.	FUEL INJECTION PUMP
11.	GOVERNOR
12.	FUEL INJECTION VALVE
13.	FUEL FILTER
14.	STARTER MOTOR
15.	GENERATOR
16.	(15A)GENERATOR

Fig. No.	Fig. Name

Fig.1. CYLINDER BLOCK

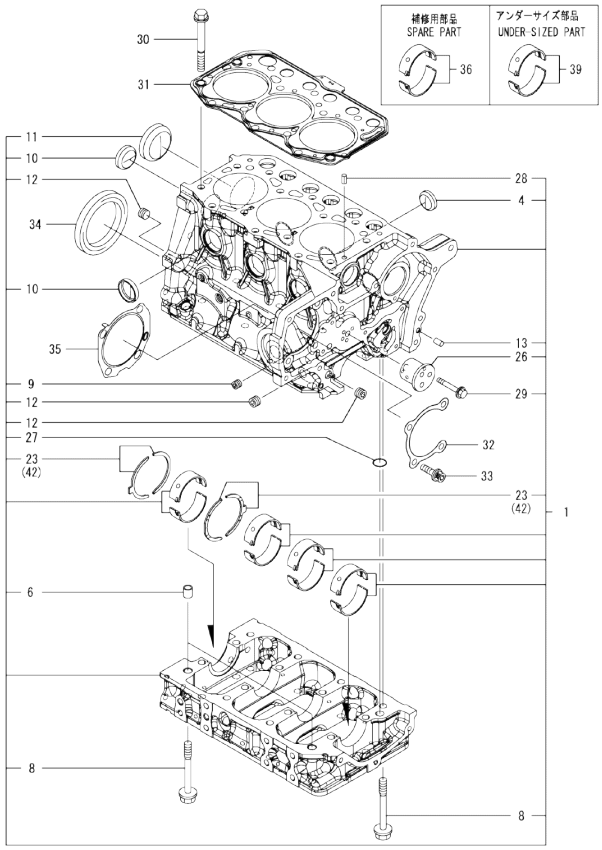

Remarks
(1)Spare parts.
(2)Under-sized(U.S.=0.25) parts.
(3)Over-sized(O.S.=0.25) parts.

(A)=3TNM72-ATE
(B)=
(C)=
(D)=
(E)=
(F)=

No.	Lev.	Parts No.	Description	Q'ty (A)	(B)	(C)	(D)	(E)	(F)	I	R
1	1	119027-01560	BLOCK ASSY, CYLINDER	1							
4	2	119125-01970	PLUG, CUP TYPE 25	3							
6	2	119125-01960	PIPE, DOWEL L=12	2							
8	2	119125-02061	BOLT, METAL CAP	16							
9	2	23876-005000	PLUG, R005	1							
10	2	27241-300000	PLUG 30	4							
11	2	27241-450000	PLUG, 45	1							
12	2	124060-01050	PLUG, PT1/8	3							
13	2	119620-01620	PIN, PARALLEL M6X10	2							
23	2	119125-02930	BEARING ASSY, THRUST	2							
26	2	119125-25050	SHAFT, IDLE GEAR	1							
27	2	129900-32040	O-RING, P14	1							
28	2	22351-060012	PIN, SPRING 6.0X12	2							
29	2	26106-060402	BOLT, M6X 40 PLATED	3							
30	1	119515-01200	BOLT, CYLINDER HEAD	14							
31	1	119025-01332	GASKET, HEAD	1							
32	1	119125-01790	GASKET	1							
33	1	119125-01800	BOLT, FLANGE M8X25	4							
34	1	119734-02220	SEAL, OIL	1							
35	1	119125-51800	GASKET	1							
36	1	119125-02900	BEARING ASSY, MAIN	4							1
39	1	119125-02910	BEARING ASSY, MAIN	4							2
42	1	119125-02940	BEARING, THRUST 0.25	2							3

N:Old ←Yes/No→ New. Q:Old ←No/Yes→ New. R:Old ←Yes/Yes→ New. S:Old ←No/No→ New. W:Add. Z:Discontinued. F:Interchangeable by set. K:Q'ty Change

Copyright (C) 2016 YANMAR CO., LTD. All RightsReserved.

Fig.2. GEAR HOUSING

(A)=3TNM72-ATE
(B)=
(C)=
(D)=
(E)=
(F)=

No.	Lev.	Parts No.	Description	Q'ty (A)	(B)	(C)	(D)	(E)	(F)	I	R
1	1	119025-01500	CASE, GEAR	1							
2	1	119125-01750	COVER, PUMP	1							
3	1	119717-01800	SEAL, OIL	1							
4	1	26106-080352	BOLT, M8X 35 PLATED	8							
5	1	26106-080452	BOLT, M8X 45 PLATED	5							
6	1	106760-01770	CAP, FILLER	1							
7	1	24311-000180	O-RING, 1AP18.0	1							

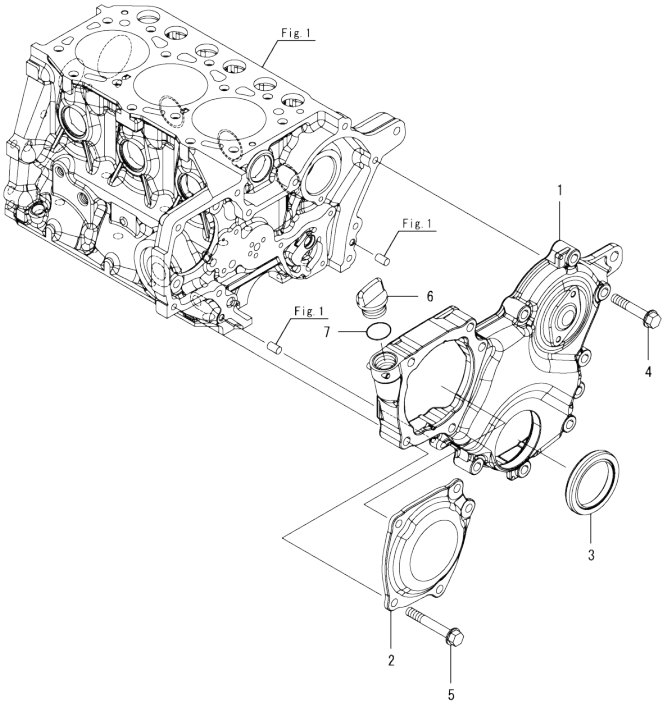

N:Old $\frac{\text{Yes}}{\text{No}}$ New. Q:Old $\frac{\text{No}}{\text{Yes}}$ New. R:Old $\frac{\text{Yes}}{\text{Yes}}$ New. S:Old $\frac{\text{No}}{\text{No}}$ New. W:Add. Z:Discontinued. F:Interchangeable by set. K:Q'ty Change

Copyright (C) 2016 YANMAR CO., LTD. All RightsReserved.

Fig.3. MOUNTING FLANGE & OIL SUMP

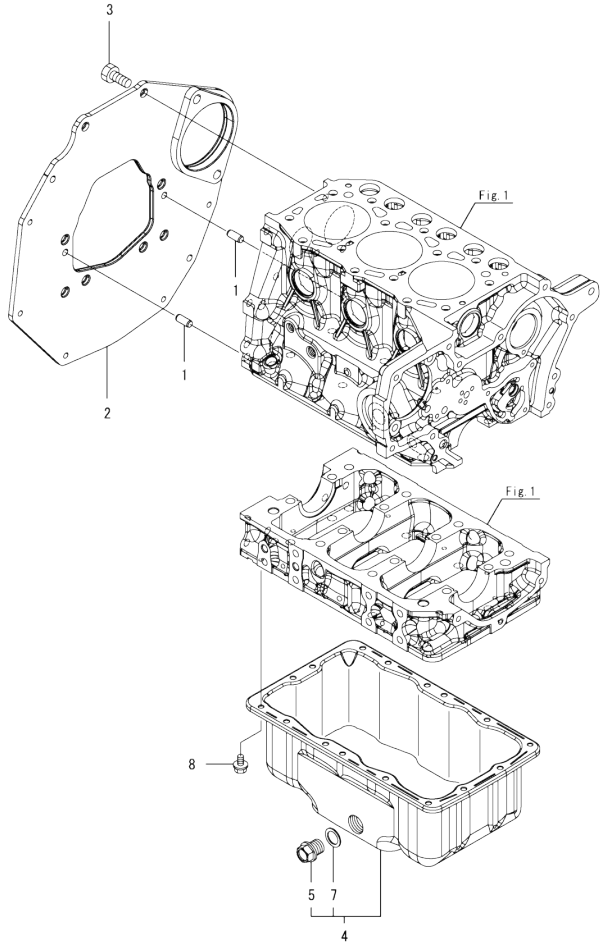

(A)=3TNM72-ATE (D)=
(B)= (E)=
(C)= (F)=

No.	Lev.	Parts No.	Description	Q'ty (A)	(B)	(C)	(D)	(E)	(F)	I	R
1	1	129100-01580	PIN, PARALLEL 8X16	2							
2	1	119D00-01660	FLANGE, MOUNTING	1							
3	1	26206-100202	BOLT, M10X 20 PLATED	8							
4	1	119025-01770	SUMP ASSY, OIL	1							
5	2	105425-01690	PLUG, M16	1							
7	2	22190-160002	WASHER, SEAL 16	1							
8	1	119125-01780	BOLT, TORX M6X10	16							

N:Old ←Yes/No→ New. Q:Old ←No/Yes→ New. R:Old ←Yes/Yes→ New. S:Old ←No/No→ New. W:Add. Z:Discontinued. F:Interchangeable by set. K:Q'ty Change

Copyright (C) 2016 YANMAR CO., LTD. All RightsReserved.

Fig.4. CYLINDER HEAD & BONNET

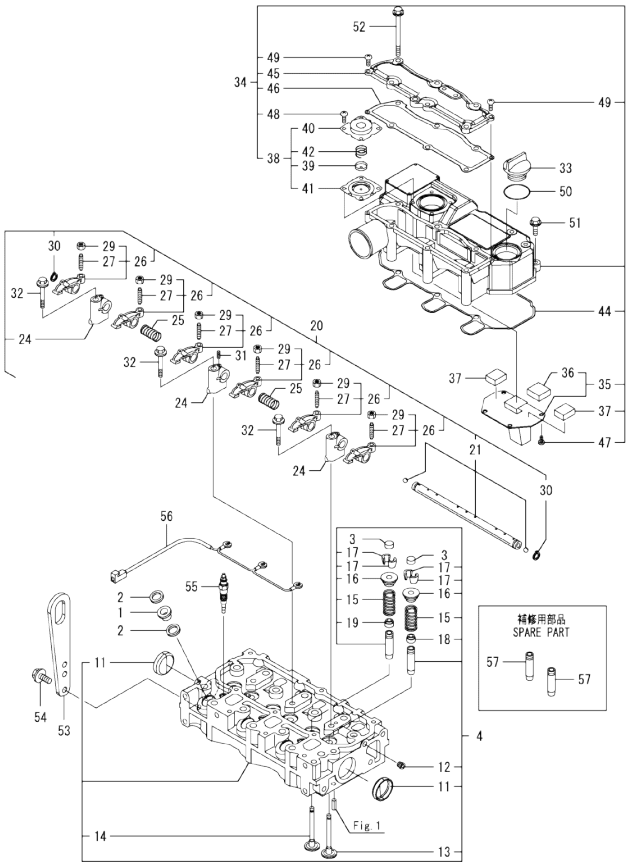

(A)=3TNM72-ATE
(B)=
(C)=
(D)=
(E)=
(F)=

No.	Lev.	Parts No.	Description	Q'ty (A)	(B)	(C)	(D)	(E)	(F)	I	R
1	1	129901-11450	PROTECTOR, NOZZLE	3							
2	1	119600-11460	GASKET, NOZZLE	6							
3	1	105010-11490	CAP, VALVE	6							
4	1	119517-11740	HEAD ASSY, CYLINDER	1							
11	2	119285-11990	PLUG, CUP TYPE 35	2							
12	2	23876-005000	PLUG, R005	1							
13	2	119515-11101	VALVE, SUCTION	3							
14	2	119515-11110	VALVE, EXHAUST	3							
15	2	119717-11131	SPRING, VALVE	6							
16	2	129508-11180	RETAINER, SPRING	6							
17	2	119717-11190	COTTER, VALVE	12							
18	2	119717-11340	SEAL, VALVE STEM	3							
19	2	119717-11350	SEAL, VALVE STEM	3							
20	1	119515-11200	SUPPORT ASSY, ROCKER	1							
21	2	119515-11240	SHAFT ASSY, ROCKER	1							
24	2	119717-11260	SUPPORT, ROCKER ARM	3							
25	2	119515-11280	SPRING, ROCKER	2							
26	2	119717-11650	ARM ASSY, ROCKER	6							
27	3	129150-11230	SCREW, VALVE ADJUST	6							
29	3	129150-11750	NUT, M8	6							
30	2	22242-000120	RING, 12	2							
31	2	26979-050162	SCREW, M5X16	1							
32	1	26106-080402	BOLT, M8X 40 PLATED	3							
33	1	124160-01751	CAP, FILLER	1							
34	1	119515-11380	BONNET ASSY, HEAD	1							
35	2	119717-03031	PLATE, BAFFLE	1							
36	3	119717-03070	BAFFLE, BREATHER	1							
37	2	119717-03070	BAFFLE, BREATHER	2							
38	2	119802-03100	DIAPHRAGM ASSY	1							
39	3	119802-03110	PLATE, DIAPHRAGM	1							
40	3	119802-03121	COVER, DIAPHRAGM	1							
41	3	119802-03131	DIAPHRAGM	1							
42	3	119802-03141	SPRING, DIAPHRAGM	1							
44	2	119515-11310	GASKET, BONNET	1							
45	2	119515-11320	COVER, BONNET	1							
46	2	119515-11330	GASKET	1							
47	2	22857-500100	SCREW, 5X10	4							
48	2	22857-500100	SCREW, 5X10	4							
49	2	22857-500160	SCREW, 5X16	2							
50	1	24311-000320	O-RING, 1AP32.0	1							
51	1	26106-060202	BOLT, M6X 20 PLATED	3							
52	1	26106-060752	BOLT, M6X 75 PLATED	6							
53	1	129900-07900	LIFTER, ENGINE	1							
54	1	26106-080162	BOLT, M8X 16 PLATED	2							
55	1	119125-77800	PLUG, GLOW	3							
56	1	119125-77820	CONNECTOR, GLOW PLUG	1							
57	1	119515-11800	GUIDE, VALVE	6							1

Remarks
(1)Spare parts.

N:Old $\frac{\text{Yes}}{\text{No}}$ New. Q:Old $\frac{\text{No}}{\text{Yes}}$ New. R:Old $\frac{\text{Yes}}{\text{Yes}}$ New. S:Old $\frac{\text{No}}{\text{No}}$ New. W:Add. Z:Discontinued. F:Interchangeable by set. K:Q'ty Change

Copyright (C) 2016 YANMAR CO., LTD. All RightsReserved.

0CD50-M02150 3TNM72-ATE

Fig.5. EXHAUST MANIFOLD

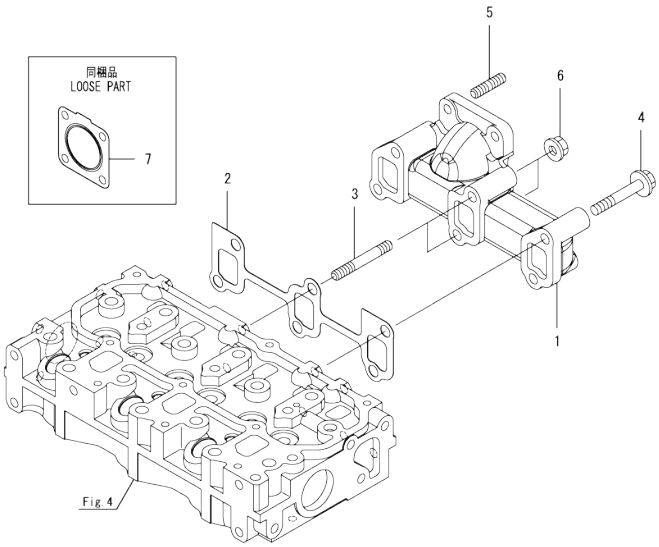

0CD50-M02150 Fig.5

(A)=3TNM72-ATE
(B)=
(C)=
(D)=
(E)=
(F)=

No.	Lev.	Parts No.	Description	Q'ty (A)	(B)	(C)	(D)	(E)	(F)	I	R
1	1	119718-13100	MANIFOLD, EXHAUST	1							
2	1	119717-13110	GASKET, EXH.MANIFOLD	1							
3	1	119717-13600	BOLT, STUD M8X50	2							
4	1	129E00-13610	BOLT, M8X50 10.9	4							
5	1	119131-18320	BOLT, STUD M8X22	4							
6	1	26306-080002	NUT, M8	2							
7	1	119515-13200	GASKET, SILENCER	1							

N:Old $\xleftarrow[\text{No}]{\text{Yes}}$ New. Q:Old $\xleftarrow[\text{Yes}]{\text{No}}$ New. R:Old $\xleftarrow[\text{Yes}]{\text{Yes}}$ New. S:Old $\xleftarrow[\text{No}]{\text{No}}$ New. W:Add. Z:Discontinued. F:Interchangeable by set. K:Q'ty Change

Copyright (C) 2016 YANMAR CO., LTD. All RightsReserved.

Fig.6. CAMSHAFT & DRIVING GEAR

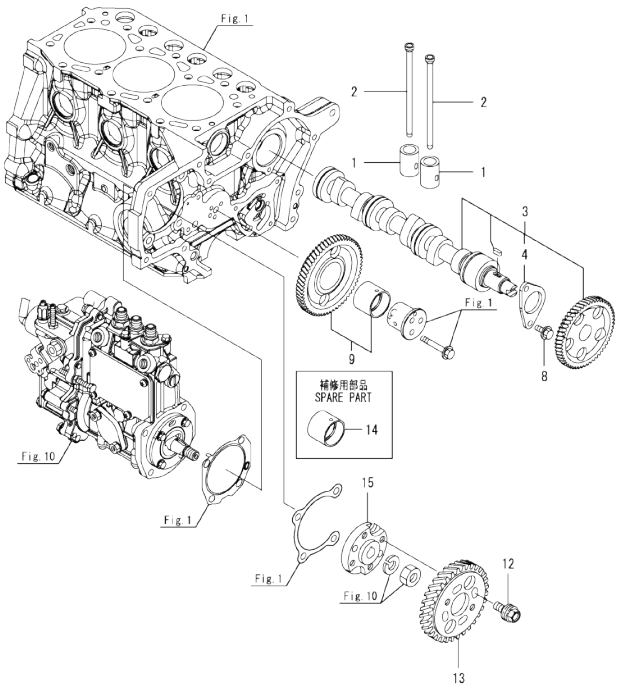

(A)=3TNM72-ATE
(B)=
(C)=
(D)=
(E)=
(F)=

No.	Lev.	Parts No.	Description	Q'ty (A)	(B)	(C)	(D)	(E)	(F)	I	R
1	1	119620-14200	TAPPET	6							
2	1	119515-14400	PUSH-ROD	6							
3	1	119025-14580	CAMSHAFT ASSY	1							
4	2	119620-02450	BEARING, THRUST	1							
8	1	26106-060122	BOLT, M6X 12 PLATED	2							
9	1	119025-25100	GEAR ASSY, IDLE	1							
12	1	129150-25301	BOLT	4							
13	1	119125-25930	GEAR, PUMP	1							
14	1	119125-25910	BUSH, IDLE GEAR	1							1
15	1	119717-51150	FLANGE	1							

Remarks
(1)Spare parts.

N:Old ←Yes/No→ New. Q:Old ←No/Yes→ New. R:Old ←Yes/Yes→ New. S:Old ←No/No→ New. W:Add. Z:Discontinued. F:Interchangeable by set. K:Q'ty Change

Copyright (C) 2016 YANMAR CO., LTD. All RightsReserved.

Fig.7. CRANKSHAFT & PISTON

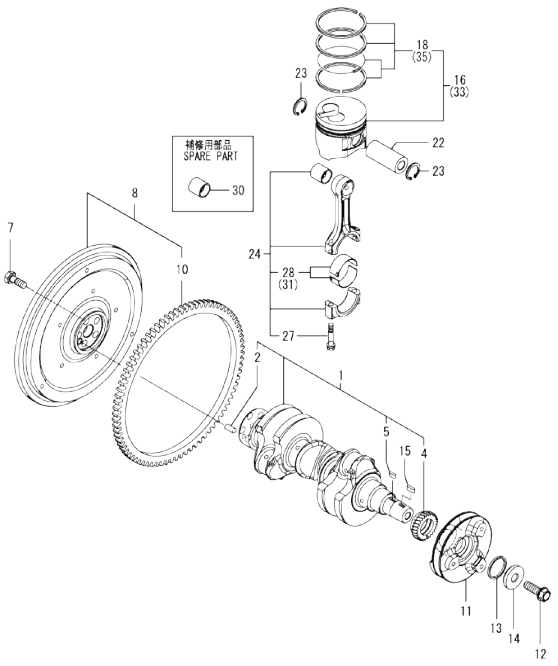

(A)=3TNM72-ATE
(B)=
(C)=
(D)=
(E)=
(F)=

No.	Lev.	Parts No.	Description	Q'ty (A)	(B)	(C)	(D)	(E)	(F)	I	R
1	1	119025-21700	CRANKSHAFT ASSY	1							
2	2	129100-01580	PIN, PARALLEL 8X16	1							
4	2	119125-21200	GEAR, CRANKSHAFT	1							
5	2	22512-040120	KEY, 4X 12	1							
7	1	119620-21500	BOLT, FLYWHEEL	5							
8	1	119127-21590	FLYWHEEL ASSY	1							
10	2	124060-21600	GEAR, RING Z=105	1							
11	1	119125-21660	V-PULLEY, CRANKSHAFT	1							
12	1	119621-21681	BOLT, FLANGE 12X1.25	1							
13	1	119C10-21930	GASKET, WASHER	1							
14	1	119C10-21940	WASHER, V-PULLEY	1							
15	1	22512-050120	KEY, 5X 12	1							
16	1	119517-22090	PISTON ASSY	3							
18	2	119517-22500	RING SET, PISTON	3							
22	1	119515-22300	PIN, PISTON	3							
23	1	22252-000220	RING, 22	6							
24	1	119515-23000	ROD ASSY, CONNECTING	3							
27	2	119717-23200	BOLT, CONNECTING ROD	6							
28	2	119515-23601	BEARING, CRANK PIN	3							
30	1	119717-23910	BEARING, PISTON PIN	3							1
31	1	119515-23611	BEARING ASSY, 0.25	3							2
33	1	119025-22900	PISTON ASSY	3							3
35	2	119609-22950	RING SET, 0.25 OS	3							3

Remarks
(1)Spare parts.
(2)Under-sized(U.S.=0.25) parts.
(3)Over-sized(O.S.=0.25) parts.

N:Old ←Yes/No→ New. Q:Old ←No/Yes→ New. R:Old ←Yes/Yes→ New. S:Old ←No/No→ New. W:Add. Z:Discontinued. F:Interchangeable by set. K:Q'ty Change

Copyright (C) 2016 YANMAR CO., LTD. All RightsReserved.

Fig.8. LUB. OIL SYSTEM

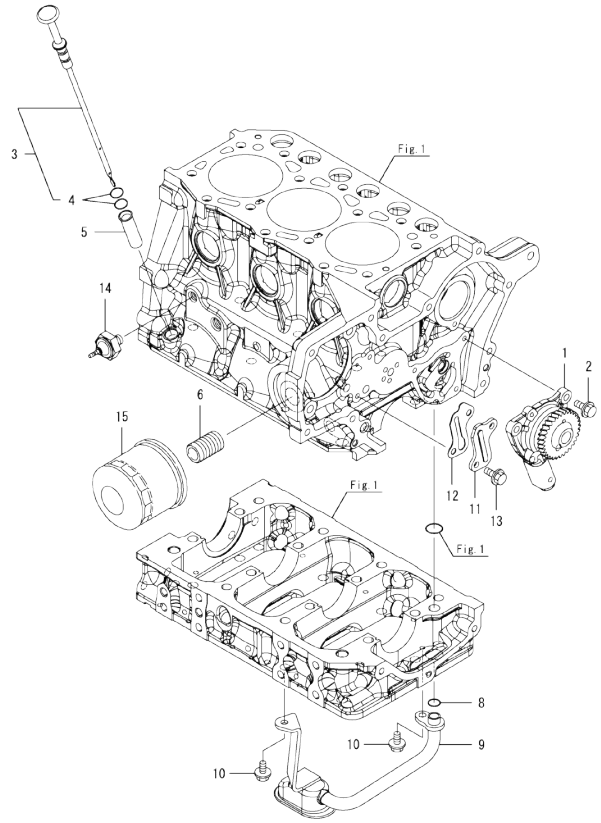

(A)=3TNM72-ATE
(B)=
(C)=
(D)=
(E)=
(F)=

No.	Lev.	Parts No.	Description	Q'ty (A)	(B)	(C)	(D)	(E)	(F)	I	R
1	1	119125-32000	PUMP ASSY, OIL	1							
2	1	26106-060142	BOLT, M6X 14 PLATED	3							
3	1	119025-34800	DIPSTICK, OIL	1							
4	2	119125-34900	O-RING	2							
5	1	119125-34810	GUIDE, DIPSTICK	1							
6	1	119717-35140	BOLT, STUD	1							
8	1	119209-35030	O-RING, P11	1							
9	1	119025-35080	PIPE ASSY, OIL INLET	1							
10	1	26106-060102	BOLT, M6X 10 PLATED	2							
11	1	119125-39200	COVER	1							
12	1	119125-39220	GASKET, OIL-PIPE	1							
13	1	26106-060122	BOLT, M6X 12 PLATED	2							
14	1	114250-39450	SWITCH, HYDRAULIC	1							
15	1	119305-35151	FILTER ASSY, D68XL65	1							1

Remarks
(1)Spare parts.

N:Old ←Yes/No→ New. Q:Old ←No/Yes→ New. R:Old ←Yes/Yes→ New. S:Old ←No/No→ New. W:Add. Z:Discontinued. F:Interchangeable by set. K:Q'ty Change

Copyright (C) 2016 YANMAR CO., LTD. All RightsReserved.

Fig.9. COOLING WATER SYSTEM

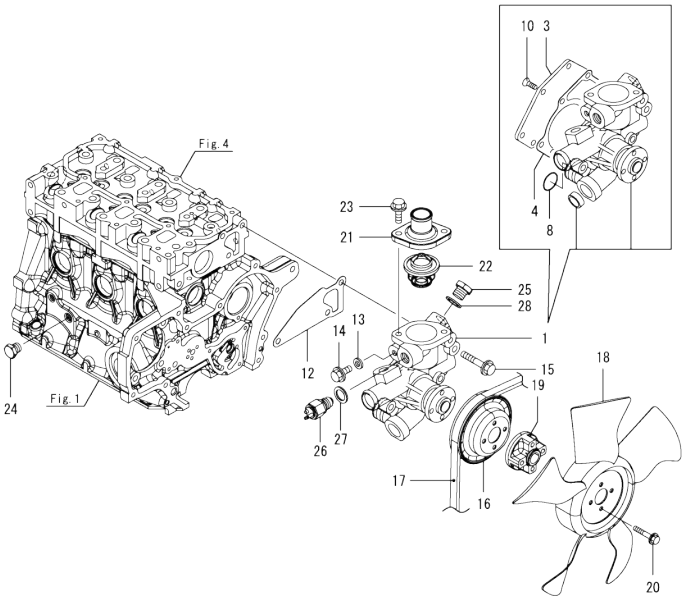

(A)=3TNM72-ATE (D)=
(B)= (E)=
(C)= (F)=

No.	Lev.	Parts No.	Description	Q'ty (A)	(B)	(C)	(D)	(E)	(F)	I	R
1	1	119025-42000	PUMP ASSY, WATER	1							
3	2	119025-42020	COVER, WATER PUMP	1							
4	2	119025-42030	GASKET, WATER PUMP	1							
8	2	119685-42281	O-RING	1							
10	2	26577-060122	SCREW, M6X12	5							
12	1	119515-42020	GASKET, WATER PUMP	1							
13	1	23414-080000	GASKET, 8X1.0	1							
14	1	26106-080122	BOLT, M8X 12 PLATED	1							
15	1	26106-080452	BOLT, M8X 45 PLATED	3							
16	1	119717-42350	V-PULLEY, PUMP D=100	1							
16-1	1	119740-42350	V-PULLEY, PUMP D=90	1						N	
	(A=EZ19306)										
17	1	25152-003500	V-BELT, A35	1							
17-1	1	119127-42310	V-BELT, A34.5	1						N	
	(A=EZ19306)										
18	1	119258-44740	FAN, COOLING D=300	1							
19	1	171353-44760	SPACER, FAN 25MM	1							
20	1	26106-060352	BOLT, M6X 35 PLATED	4							
21	1	129350-49530	COVER, THERMOSTAT	1							
22	1	119717-49800	THERMOSTAT, 71C	1							
23	1	26106-080202	BOLT, M8X 20 PLATED	2							
24	1	171056-49120	PLUG, DRAIN R1/4	1							
25	1	121450-42450	PLUG, M16	1							
26	1	121250-44901	SWITCH, TEMPERATURE	1							
27	1	124465-44950	GASKET, 16	1							
28	1	124465-44950	GASKET, 16	1							

N:Old ←Yes/No→ New. Q:Old ←No/Yes→ New. R:Old ←Yes/Yes→ New. S:Old ←No/No→ New. W:Add. Z:Discontinued. F:Interchangeable by set. K:Q'ty Change

Copyright (C) 2016 YANMAR CO., LTD. All RightsReserved.

Fig.10. FUEL INJECTION PUMP

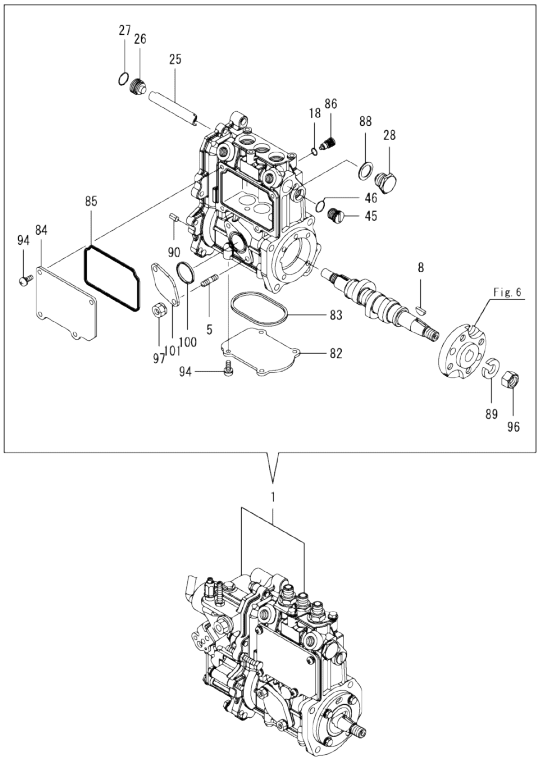

(A)=3TNM72-ATE
(B)=
(C)=
(D)=
(E)=
(F)=

No.	Lev.	Parts No.	Description	Q'ty (A)	(B)	(C)	(D)	(E)	(F)	I	R
1	1	719027-51380	FIE ASSY	1							1
5	2	129155-51020	BOLT, STUD	2							
8	2	122710-51090	FEATHER KEY,WOODRUFF	1							
18	2	129155-51280	O-RING, S6	1							
25	2	129155-51400	DEFLECTOR	1							
26	2	158600-51410	PLUG, DEFLECTOR	1							
27	2	119717-51420	O-RING	1							
28	2	158600-51420	PLUG, DEFLECTOR	1							
45	2	158600-51570	PLUG, RACK	1							
46	2	129155-51580	O-RING	1							
82	2	119125-51700	COVER, PUMP	1							
83	2	119717-51711	GASKET	1							
84	2	119717-51750	COVER	1							
85	2	119717-51761	GASKET	1							
86	2	158600-51790	STOPPER, RACK	1							
88	2	22190-160002	WASHER, SEAL 16	1							
89	2	22217-120000	WASHER, SPRING 12	1							
90	2	22351-050010	PIN, SPRING 5.0X10	2							
94	2	26022-050122	SCREW, M5X12	8							
96	2	26716-120002	NUT, M12	1							
97	2	119717-51860	NUT, M6	2							
100	2	129155-52051	GASKET	1							
101	2	129100-52200	COVER, PUMP	1							

Remarks
(1)Governor(Fig.11) is incorporated in this Fuel Injection Pump(No.1).

N:Old $\xleftarrow[\text{No}]{\text{Yes}}$ New. Q:Old $\xleftarrow[\text{Yes}]{\text{No}}$ New, R:Old $\xleftarrow[\text{Yes}]{\text{Yes}}$ New. S:Old $\xleftarrow[\text{No}]{\text{No}}$ New. W:Add. Z:Discontinued. F:Interchangeable by set. K:Q'ty Change

Copyright (C) 2016 YANMAR CO., LTD. All RightsReserved.

Fig.11. GOVERNOR

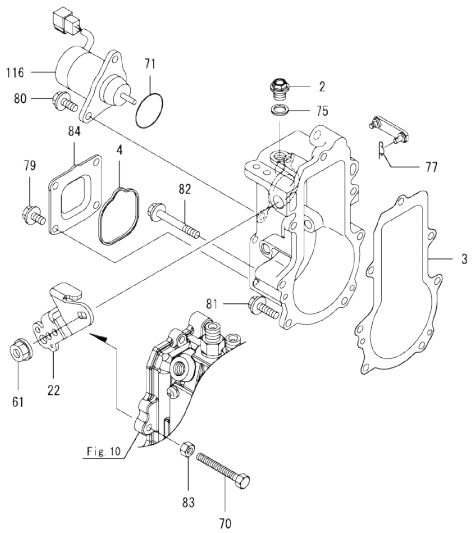

Remarks
* This figure(Governor) is incorporated in the Fuel Injection Pump(Fig.10).

(A)=3TNM72-ATE
(B)=
(C)=
(D)=
(E)=
(F)=

No.	Lev.	Parts No.	Description	Q'ty (A)	(B)	(C)	(D)	(E)	(F)	I	R
2	2	119717-51930	PLUG, M10	1							
3	2	119717-61050	GASKET	1							
4	2	119717-61070	GASKET	1							
22	2	119515-61440	LEVER, CONTROL	1							
61	2	26366-080002	NUT, M8	1							
70	2	129155-61460	BOLT, LIMITING	1							
71	2	158552-61900	O-RING	1							
75	2	22190-100002	WASHER, SEAL 10	1							
77	2	22372-040000	PIN, SNAP 4	1							
79	2	26106-060102	BOLT, M6X 10 PLATED	4							
80	2	26106-060142	BOLT, M6X 14 PLATED	2							
81	2	26106-060202	BOLT, M6X 20 PLATED	4							
82	2	26106-060452	BOLT, M6X 45 PLATED	3							
83	2	26756-060002	NUT, LOCK M6	1							
84	2	119717-61060	COVER, GOVERNOR CASE	1							
116	2	129630-77900	SOLENOID, STOP	1							

N:Old ◄Yes/No► New. Q:Old ◄No/Yes► New. R:Old ◄Yes/Yes► New. S:Old ◄No/No► New. W:Add. Z:Discontinued. F:Interchangeable by set. K:Q'ty Change

Copyright (C) 2016 YANMAR CO., LTD. All RightsReserved.

Fig.12. FUEL INJECTION VALVE

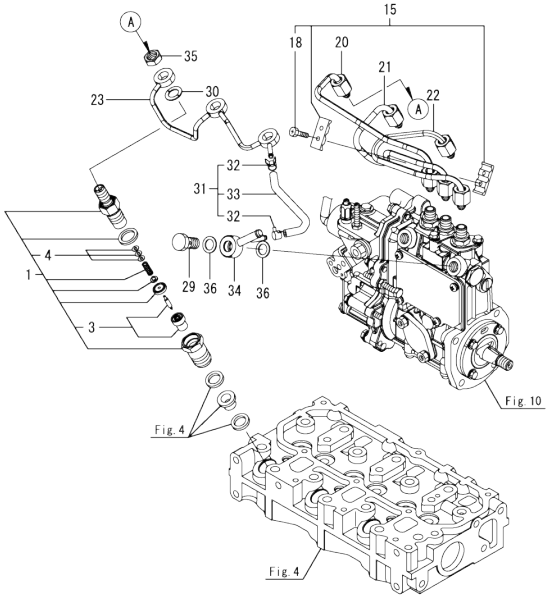

(A)=3TNM72-ATE
(B)=
(C)=
(D)=
(E)=
(F)=

No.	Lev.	Parts No.	Description	Q'ty (A)	(B)	(C)	(D)	(E)	(F)	I	R
1	1	119515-53001	VALVE ASSY,INJECTION	3							
3	2	119515-53010	NOZZLE ASSY, F.I.	3							
4	2	129901-53800	SHIM SET, ADJUSTING	3							
15	1	129150-59120	RETAINER, PIPE	1							
18	2	129150-59131	BOLT, M4X14	2							
20	1	119025-59810	PIPE, FUEL INJECTION	1							
21	1	119025-59820	PIPE, FUEL INJECTION	1							
22	1	119025-59830	PIPE, FUEL INJECTION	1							
23	1	119515-59540	PIPE ASSY, RETURN	1							
29	1	119125-59560	BOLT, PIPE JOINT	1							
30	1	129901-59560	GASKET	3							
31	1	119125-59570	HOSE ASSY, RETURN	1							
32	2	124066-59100	CLAMP, HOSE 8	2							
33	2	119000-59550	HOSE, FUEL RETURN	1							
34	1	119840-59570	JOINT	1							
35	1	119620-59700	NUT, NOZZLE	3							
36	1	22190-120002	WASHER, SEAL 12	3							

N:Old ◄Yes/No► New. Q:Old ◄No/Yes► New. R:Old ◄Yes/Yes► New. S:Old ◄No/No► New. W:Add. Z:Discontinued. F:Interchangeable by set. K:Q'ty Change

Copyright (C) 2016 YANMAR CO., LTD. All RightsReserved.

Fig.13. FUEL FILTER

(A)=3TNM72-ATE
(B)=
(C)=
(D)=
(E)=
(F)=

No.	Lev.	Parts No.	Description	Q'ty (A)	(B)	(C)	(D)	(E)	(F)	I	R
1	1	103854-39140	BOLT, PIPE JOINT	1							
2	1	101304-59020	JOINT, PIPE 12	1							
3	1	22190-120002	WASHER, SEAL 12	2							
4	1	119225-52102	PUMP, FUEL FEED	1							
5	1	129940-55601	FILTER ASSY, FUEL	1							
6	2	129004-55612	BRACKET, FILTER	1							
7	2	119802-55801	FILTER, FUEL	1							

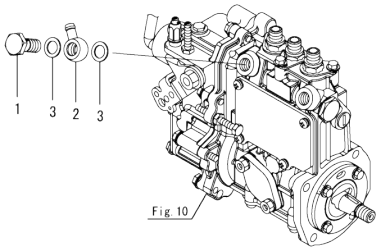

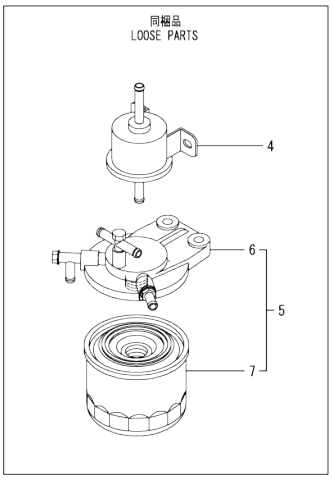

N:Old ←Yes/No→ New. Q:Old ←No/Yes→ New. R:Old ←Yes/Yes→ New. S:Old ←No/No→ New. W:Add. Z:Discontinued. F:Interchangeable by set. K:Q'ty Change

Copyright (C) 2016 YANMAR CO., LTD. All RightsReserved.

Fig.14. STARTER MOTOR

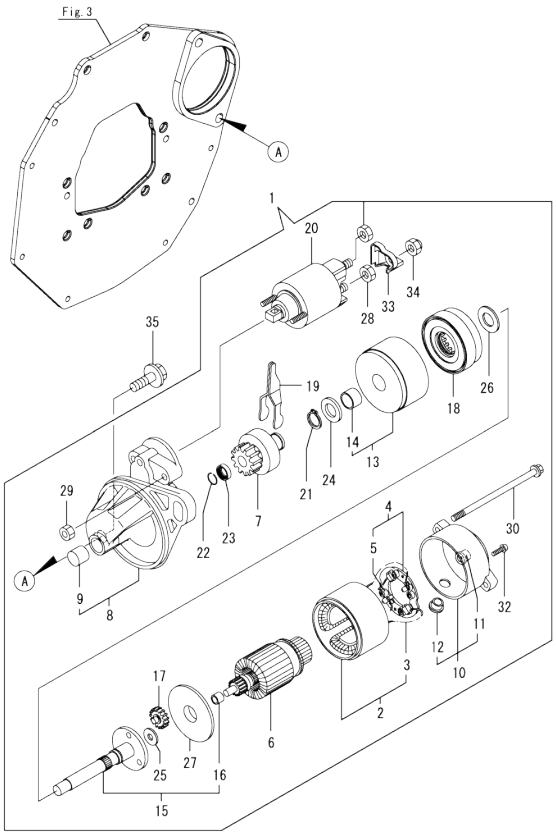

(A)=3TNM72-ATE
(B)=
(C)=
(D)=
(E)=
(F)=

No.	Lev.	Parts No.	Description	Q'ty (A)	(B)	(C)	(D)	(E)	(F)	I	R
1	1	119515-77010	STARTER ASSY	1							
2	2	X0281007680	YOKE ASSY	1							
3	3	X0280996180	STARTER KIT	2							
4	2	X0285105190	HOLDER ASSY	1							
5	3	X0285205030	SPRING	4							
6	2	X0282005871	ARMATURE ASSY	1							
7	2	X0283006960	CLUTCH ASSY	1							
8	2	X4284001590	HOUSING ASSY	1							
9	3	X9491050100	BEARING, NEEDLE	1							
10	2	X0285007030	FRAME ASSY	1							
11	3	X9491040990	BEARING	1							
12	3	X0280626010	COVER	1							
13	2	X0284105040	BEARING ASSY	1							
14	3	X9491034330	BEARING	1							
15	2	X0286105010	SHAFT ASSY	1							
16	3	X9491034320	BEARING	1							
17	2	X0286305010	GEAR	3							
18	2	X0286355010	GEAR	1							
19	2	X0287405140	LEVER	1							
20	2	X0534007800	SWITCH ASSY	1							
21	2	X9055715000	RING	1							
22	2	X9490721360	RING	1							
23	2	X0280210331	NUT	1							
24	2	X9490138110	WASHER	1							
25	2	X9490138090	WASHER	1							
26	2	X9490138100	WASHER	1							
27	2	X0284525010	PLATE	1							
28	2	X9490562360	NUT	1							
29	2	X9490560750	NUT	2							
30	2	X9490423520	BOLT, THROUGH	2							
32	2	X9490065670	SCREW, M4X6	2							
33	2	X0280335360	COVER, TERMINAL	1							
34	2	X1289510130	NUT	1							
35	1	26106-100302	BOLT, M10X 30 PLATED	2							

N:Old ◄Yes/No► New. Q:Old ◄No/Yes► New. R:Old ◄Yes/Yes► New. S:Old ◄No/No► New. W:Add. Z:Discontinued. F:Interchangeable by set. K:Q'ty Change

Copyright (C) 2016 YANMAR CO., LTD. All RightsReserved.

Fig.15. GENERATOR

(A)=3TNM72-ATE
(B)=
(C)=
(D)=
(E)=
(F)=

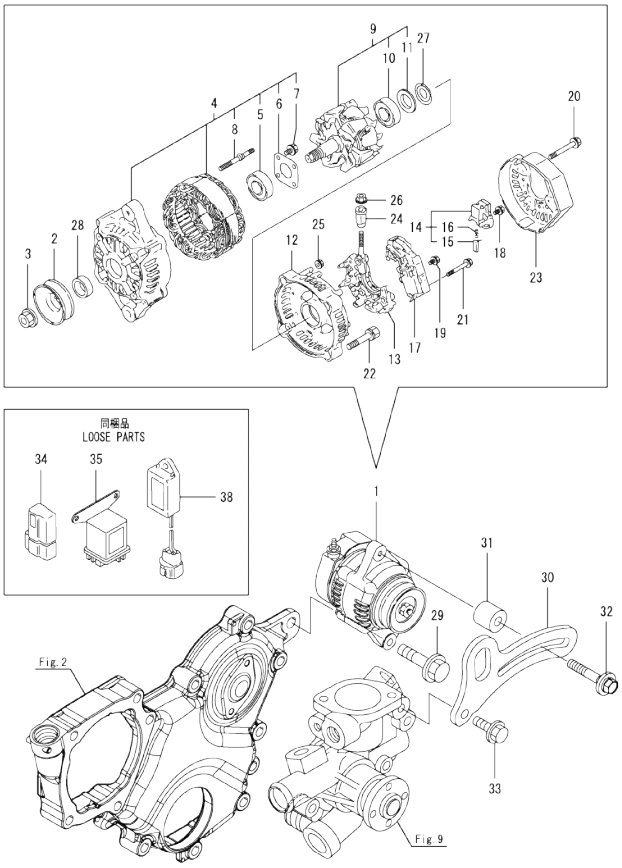

No.	Lev.	Parts No.	Description	Q'ty (A)	(B)	(C)	(D)	(E)	(F)	I	R
1	1	119646-77200	GENERATOR ASSY	1							1
2	2	119620-77461	PULLEY, GENERATOR	1							
3	2	119620-77471	NUT	1							
4	2	119620-77421	FRAME ASSY, DRIVE	1							
5	3	119620-79200	BEARING, BALL	1							
6	3	119620-79210	PLATE, RETAINER	1							
7	3	119620-79220	SCREW	4							
8	3	119620-79230	STUD	2							
9	2	119620-77380	ROTOR ASSY	1							
10	3	123501-79240	BEARING, BALL	1							
11	3	119620-79250	COVER, BEARING	1							
12	2	119620-77440	FRAME ASSY, REAR	1							
13	2	119620-79260	HOLDER ASSY	1							
14	2	119620-79270	HOLDER ASSY, BRUSH	1							
15	3	119620-77480	BRUSH ASSY, SUB	2							
16	3	119620-79280	SPRING	2							
17	2	119646-77710	REGULATOR ASSY	1							
18	2	119620-79290	SCREW	6							
19	2	119620-79300	SCREW	1							
20	2	119620-79310	BOLT	3							
21	2	119620-79320	SCREW, W/WASHER	2							
22	2	119620-79330	BOLT	2							
23	2	119620-77450	COVER, REAR END	1							
24	2	119620-79340	BUSH, INSULATION	1							
25	2	119620-79350	NUT	2							
26	2	X9490561001	NUT	1							
27	2	119620-79360	WASHER, THRUST	1							
28	2	119620-77490	COLLAR	1							
29	1	26106-100552	BOLT, M10X 55 PLATED	1							1
30	1	119125-77330	ADJUSTER, BELT	1							
31	1	124732-77340	SPACER, ADJUSTER	1							
32	1	129972-77341	BOLT, ADJUSTER L=50	1							
33	1	26106-080202	BOLT, M8X 20 PLATED	1							
34	1	119643-66900	DIODE	1							
35	1	119650-77911	RELAY ASSY, GLOW	1							
38	1	129211-77920	TIMER, SECTION 1	1							

Remarks
(1)[(A)=EZ19305] or previous machines(Refer to Fig.16).

N:Old ←Yes/No→ New. Q:Old ←No/Yes→ New. R:Old ←Yes/Yes→ New. S:Old ←No/No→ New. W:Add. Z:Discontinued. F:Interchangeable by set. K:Q'ty Change

Copyright (C) 2016 YANMAR CO., LTD. All RightsReserved.

Fig.16. (15A)GENERATOR

(A)=3TNM72-ATE
(B)=
(C)=
(D)=
(E)=
(F)=

No.	Lev.	Parts No.	Description	Q'ty (A)	(B)	(C)	(D)	(E)	(F)	I	R
1	1	129052-77240	ALTERNATOR, 12V-55A	1							
2	2	X9490561001	NUT	1							
3	2	129052-77380	ROTOR ASSY	1							
4	3	123501-79240	BEARING, BALL	1							
5	3	119620-79250	COVER, BEARING	1							
6	2	129052-77422	FRAME ASSY	1							
7	3	119620-79200	BEARING, BALL	1							
8	3	119620-79210	PLATE, RETAINER	1							
9	3	119620-79220	SCREW	4							
10	3	119620-79230	STUD	2							
11	2	128401-77440	COVER, END	1							
12	2	128401-77450	COVER, GENERATOR	1							
13	2	119620-77461	PULLEY, GENERATOR	1							
14	2	119620-77471	NUT	1							
15	2	119620-77490	COLLAR	1							
16	2	119620-77720	REGULATOR ASSY	1							
17	2	129052-79260	HOLDER ASSY	1							
18	2	129052-79270	HOLDER ASSY, BRUSH	1							
19	2	119620-79290	SCREW	6							
20	2	119620-79300	SCREW	1							
21	2	119620-79310	BOLT	3							
22	2	119620-79320	SCREW, W/WASHER	2							
23	2	119620-79330	BOLT	2							
24	2	119620-79340	BUSH, INSULATION	1							
25	2	119620-79350	NUT	2							
26	1	26106-100402	BOLT, M10X 40 PLATED	1							

Remarks
* This item is applicable to [(A)=EZ19306] or following machines(Refer to Fig.15).

N:Old ←Yes/No→ New. Q:Old ←No/Yes→ New. R:Old ←Yes/Yes→ New. S:Old ←No/No→ New. W:Add. Z:Discontinued. F:Interchangeable by set. K:Q'ty Change

Copyright (C) 2016 YANMAR CO., LTD. All RightsReserved.

Parts No. Index

Parts No.	Fig. No.	Ref. No.
101304-59020	13	2
103854-39140	13	1
105010-11490	4	3
105425-01690	3	5
106760-01770	2	6
114250-39450	8	14
119000-59550	12	33
119025-01332	1	31
119025-01500	2	1
119025-01770	3	4
119025-14580	6	3
119025-21700	7	1
119025-22900	7	33
119025-25100	6	9
119025-34800	8	3
119025-35080	8	9
119025-42000	9	1
119025-42020	9	3
119025-42030	9	4
119025-59810	12	20
119025-59820	12	21
119025-59830	12	22
119027-01560	1	1
119125-01750	2	2
119125-01780	3	8
119125-01790	1	32
119125-01800	1	33
119125-01960	1	6
119125-01970	1	4
119125-02061	1	8
119125-02900	1	36
119125-02910	1	39
119125-02930	1	23
119125-02940	1	42
119125-21200	7	4
119125-21660	7	11
119125-25050	1	26
119125-25910	6	14
119125-25930	6	13
119125-32000	8	1
119125-34810	8	5
119125-34900	8	4
119125-39200	8	11
119125-39220	8	12
119125-51700	10	82
119125-51800	1	35
119125-59560	12	29
119125-59570	12	31
119125-77330	15	30
119125-77800	4	55

Parts No.	Fig. No.	Ref. No.
119125-77820	4	56
119127-21590	7	8
119127-42310	9	17 -1
119131-18320	5	5
119209-35030	8	8
119225-52102	13	4
119258-44740	9	18
119285-11990	4	11
119305-35151	8	15
119515-01200	1	30
119515-11101	4	13
119515-11110	4	14
119515-11200	4	20
119515-11240	4	21
119515-11280	4	25
119515-11310	4	44
119515-11320	4	45
119515-11330	4	46
119515-11380	4	34
119515-11800	4	57
119515-13200	5	7
119515-14400	6	2
119515-22300	7	22
119515-23000	7	24
119515-23601	7	28
119515-23611	7	31
119515-42020	9	12
119515-53001	12	1
119515-53010	12	3
119515-59540	12	23
119515-61440	11	22
119515-77010	14	1
119517-11740	4	4
119517-22090	7	16
119517-22500	7	18
119600-11460	4	2
119609-22950	7	35
119620-01620	1	13
119620-02450	6	4
119620-14200	6	1
119620-21500	7	7
119620-59700	12	35
119620-77380	15	9
119620-77421	15	4
119620-77440	15	12
119620-77450	15	23
119620-77461	15	2
	16	13
119620-77471	15	3
	16	14

Parts No.	Fig. No.	Ref. No.
119620-77480	15	15
119620-77490	15	28
	16	15
119620-77720	16	16
119620-79200	15	5
	16	7
119620-79210	15	6
	16	8
119620-79220	15	7
	16	9
119620-79230	15	8
	16	10
119620-79250	15	11
	16	5
119620-79260	15	13
119620-79270	15	14
119620-79280	15	16
119620-79290	15	18
	16	19
119620-79300	15	19
	16	20
119620-79310	15	20
	16	21
119620-79320	15	21
	16	22
119620-79330	15	22
	16	23
119620-79340	15	24
	16	24
119620-79350	15	25
	16	25
119620-79360	15	27
119621-21681	7	12
119643-66900	15	34
119646-77200	15	1
119646-77710	15	17
119650-77911	15	35
119685-42281	9	8
119717-01800	2	3
119717-03031	4	35
119717-03070	4	36
		37
119717-11131	4	15
119717-11190	4	17
119717-11260	4	24
119717-11340	4	18
119717-11350	4	19
119717-11650	4	26
119717-13110	5	2
119717-13600	5	3

Parts No.	Fig. No.	Ref. No.
119717-23200	7	27
119717-23910	7	30
119717-35140	8	6
119717-42350	9	16
119717-49800	9	22
119717-51150	6	15
119717-51420	10	27
119717-51711	10	83
119717-51750	10	84
119717-51761	10	85
119717-51860	10	97
119717-51930	11	2
119717-61050	11	3
119717-61060	11	84
119717-61070	11	4
119718-13100	5	1
119734-02220	1	34
119740-42350	9	16 -1
119802-03100	4	38
119802-03110	4	39
119802-03121	4	40
119802-03131	4	41
119802-03141	4	42
119802-55801	13	7
119840-59570	12	34
119C10-21930	7	13
119C10-21940	7	14
119D00-01660	3	2
121250-44901	9	26
121450-42450	9	25
122710-51090	10	8
123501-79240	15	10
	16	4
124060-01050	1	12
124060-21600	7	10
124066-59100	12	32
124160-01751	4	33
124465-44950	9	27
		28
124732-77340	15	31
128401-77440	16	11
128401-77450	16	12
129004-55612	13	6
129052-77240	16	1
129052-77380	16	3
129052-77422	16	6
129052-79260	16	17
129052-79270	16	18
129100-01580	3	1
	7	2

Parts No. Index

Parts No.	Fig. No.	Ref. No.
129100-52200	10	101
129150-11230	4	27
129150-11750	4	29
129150-25301	6	12
129150-59120	12	15
129150-59131	12	18
129155-51020	10	5
129155-51280	10	18
129155-51400	10	25
129155-51580	10	46
129155-52051	10	100
129155-61460	11	70
129211-77920	15	38
129350-49530	9	21
129508-11180	4	16
129630-77900	11	116
129900-07900	4	53
129900-32040	1	27
129901-11450	4	1
129901-53800	12	4
129901-59560	12	30
129940-55601	13	5
129972-77341	15	32
129E00-13610	5	4
158552-61900	11	71
158600-51410	10	26
158600-51420	10	28
158600-51570	10	45
158600-51790	10	86
171056-49120	9	24
171353-44760	9	19
22190-100002	11	75
22190-120002	12	36
	13	3
22190-160002	3	7
	10	88
22217-120000	10	89
22242-000120	4	30
22252-000220	7	23
22351-050010	10	90
22351-060012	1	28
22372-040000	11	77
22512-040120	7	5
22512-050120	7	15
22857-500100	4	47
		48
22857-500160	4	49
23414-080000	9	13
23876-005000	1	9
	4	12

Parts No.	Fig. No.	Ref. No.
24311-000180	2	7
24311-000320	4	50
25152-003500	9	17
26022-050122	10	94
26106-060102	8	10
	11	79
26106-060122	6	8
	8	13
26106-060142	8	2
	11	80
26106-060202	4	51
	11	81
26106-060352	9	20
26106-060402	1	29
26106-060452	11	82
26106-060752	4	52
26106-080122	9	14
26106-080162	4	54
26106-080202	9	23
	15	33
26106-080352	2	4
26106-080402	4	32
26106-080452	2	5
	9	15
26106-100302	14	35
26106-100402	16	26
26106-100552	15	29
26206-100202	3	3
26306-080002	5	6
26366-080002	11	61
26577-060122	9	10
26716-120002	10	96
26756-060002	11	83
26979-050162	4	31
27241-300000	1	10
27241-450000	1	11
719027-51380	10	1
X0280210331	14	23
X0280335360	14	33
X0280626010	14	12
X0280996180	14	3
X0281007680	14	2
X0282005871	14	6
X0283006960	14	7
X0284105040	14	13
X0284525010	14	27
X0285007030	14	10
X0285105190	14	4
X0285205030	14	5
X0286105010	14	15

Parts No.	Fig. No.	Ref. No.
X0286305010	14	17
X0286355010	14	18
X0287405140	14	19
X0534007800	14	20
X1289510130	14	34
X4284001590	14	8
X9055715000	14	21
X9490065670	14	32
X9490138090	14	25
X9490138100	14	26
X9490138110	14	24
X9490423520	14	30
X9490560750	14	29
X9490561001	15	26
	16	2
X9490562360	14	28
X9490721360	14	22
X9491034320	14	16
X9491034330	14	14
X9491040990	14	11
X9491050100	14	9

Parts No.	Fig. No.	Ref. No.